Issued for: Notice of Intent

Issued: June 29, 2022

JDE Project Number: 01-2021-020

Site Development Plans

Proposed Office & Shop Building

809 South Franklin Street (Route 37)
Holbrook, Norfolk County, MA 02343

PREPARED FOR:

Johnson Sheet Metal Co., Inc.

809 South Franklin Street (Route 37)
Holbrook, Norfolk County, MA 02343

Sheet Index

No.	Drawing Title	Date	Revised
1	Cover, General Notes and Legend	06-29-2022	08/18/2022
2	Existing Conditions Plan	06-29-2022	08/18/2022
3	Layout & Materials Plan	06-29-2022	08/18/2022
4	Grading, Drainage, Utility & Erosion Control Plan	06-29-2022	08/18/2022
5	Landscaping Plan	06-29-2022	08/18/2022
6	Details	06-29-2022	08/18/2022
7	Details	06-29-2022	08/18/2022
8	Details	06-29-2022	08/18/2022

LOCUS MAP
NOT TO SCALE

PREPARED BY:

Jacobs Driscoll Engineering

Civil Engineering and Land Surveying Professionals
50 Oliver Street
North Easton, MA 02356

LEGEND

EXIST	PROP	
L=50.00'	L=50.00'	PROPERTY LINE
STA	STA	BASELINE
		ZONING LINE
		GRAVEL ROAD
EOP	EOP	EDGE OF PAVEMENT
BCC	BCC	BITUMINOUS CURB
CCB	CCB	CAPE COD BERM
PCC	PCC	PRECAST CONC. CURB
VGC	VGC	VERT. GRAN. CURB
SGC	SGC	SLOPED GRAN. CURB
		LIMIT OF CURB TYPE
		SAWCUT
MATCHLINE SEE SHEET 1 OF 30		MATCHLINE
		STEEL GUARD RAIL
		WOOD GUARD RAIL
		STOCKADE FENCE
		TREE LINE
		CHAIN LINK FENCE
		STONE WALL
		RETAINING WALL
		HAY BALES
2		MINOR CONTOUR
10	250	MAJOR CONTOUR
		BUILDING
EN	EN	BUILDING ENTRANCE
LD	LD	LOADING DOCK
GD	GD	GARAGE DOOR
		BOLLARD
		SIGN
		DOUBLE SIGN
27.21 TC 27.15 BC	TOP BOTTOM	SPOT ELEVATION TOP & BOTTOM ELEVATION
		BORING LOCATION
		TEST PIT LOCATION

EXIST	PROP	
12"D	12"D	DRAINAGE LINE
OD	OD	OVERFLOW DRAIN
6"RD	8"RD	ROOF DRAIN
12"S	12"S	SEWER LINE
OHW	OHW	OVERHEAD WIRES
6"W	6"W	WATER LINE
FP	6"FP	FIRE PROTECTION LINE
G	G	GAS LINE
E	E	UNDERGROUND ELECTRIC
T	T	TELEPHONE LINE
	CB	CATCH BASIN
	DCB	DOUBLE CATCH BASIN
		DRAIN INLET
	DMH	DRAIN MANHOLE
		TRENCH DRAIN
		PLUG/STUB
FES	FES	FLARED END SECTION
		HEADWALL
GT	GT	GREASE TRAP
OCS	OCS	CONTROL STRUCTURE
		SEWER MANHOLE
		WATER MANHOLE
	WG	WATER GATE
TSV	TSV	TAPPING SLEEVE, VALVE, & BOX RISER
	HYD	FIRE HYDRANT
WM	WM	WATER METER
		WELL
GM	GG	GAS GATE
GM	GM	GAS METER
	EMH	ELECTRIC MANHOLE
EM	EB	ELECTRIC BOX
EM	EM	ELECTRIC METER
		LIGHT POLE
		TELEPHONE MANHOLE
FB	FB	FIRE ALARM BOX
		UTILITY POLE
		ROOF DRAIN CLEANOUT COVER
	CCP	CORRUGATED PLASTIC PIPE

GENERAL CONSTRUCTION NOTES

1. ALL PROPOSED WALKWAYS WILL BE HANDICAPPED ACCESSIBLE. ALL PROPOSED SLOPES ON WALKWAYS TO BE LESS THAN 5%.

2. THE CONTRACTOR SHALL BE RESPONSIBLE FOR VERIFYING THAT THE PROPOSED IMPROVEMENTS SHOWN ON THE PLANS DO NOT CONFLICT WITH ANY EXISTING INFORMATION OR OTHER PROPOSED IMPROVEMENTS. WHERE AN EXISTING UTILITY IS FOUND TO CONFLICT WITH THE PROPOSED WORK, THE LOCATION, ELEVATION AND SIZE OF THE UTILITY SHALL BE ACCURATELY DETERMINED WITHOUT DELAY BY THE CONTRACTOR, AND THE INFORMATION FURNISHED TO JACOBS DRISCOLL ENGINEERING (JDE). CONTRACTOR WILL REFER TO (JDE) FOR ALL TECHNICAL COMMENTS FOR RESOLUTION OF THE CONFLICT.

3. AREAS OUTSIDE THE LIMITS OF PROPOSED WORK DISTURBED BY THE CONTRACTOR'S OPERATIONS SHALL BE RESTORED BY THE CONTRACTOR TO THEIR ORIGINAL CONDITION AT THE CONTRACTOR'S EXPENSE.

4. THE TERM "PROPOSED" (PROP.) MEANS WORK TO BE CONSTRUCTED USING NEW MATERIALS OR, WHERE APPLICABLE, RE-USING EXISTING MATERIALS IDENTIFIED AS "REMOVE AND RESET". (R&R)

5. JOINTS BETWEEN NEW BITUMINOUS CONCRETE ROADWAY PAVEMENT AND SAWCUT EXISTING PAVEMENT SHALL BE SEALED WITH BITUMEN AND BACKSANDED.

6. THE LOCATION OF EXISTING UNDERGROUND UTILITIES ARE SHOWN IN AN APPROXIMATE WAY ONLY AND HAVE NOT BEEN INDEPENDENTLY VERIFIED BY THE OWNER OR THEIR REPRESENTATIVE. THE CONTRACTOR SHALL DETERMINE THE EXACT LOCATION OF ALL EXISTING UTILITIES BEFORE THE START OF ANY WORK. THE CONTRACTOR AGREES TO BE FULLY RESPONSIBLE FOR ANY AND ALL DAMAGES WHICH MIGHT BE OCCASIONED BY THE CONTRACTOR'S FAILURE TO LOCATE THE UTILITIES EXACTLY. THE CONTRACTOR SHALL PRESERVE ALL UNDERGROUND UTILITIES. THE CONTRACTOR MUST CALL "DIG SAFE" (AT 1-888-DIG-SAFE) AND THE TOWN OF HOLBROOK DPW AT LEAST 72 HOURS TO MARK APPROPRIATE UTILITIES BEFORE THE START OF CONSTRUCTION.

7. ALL AREAS DISTURBED DURING CONSTRUCTION SHALL BE REPLACED IN KIND. LAWN AREAS SHALL HAVE A MODIFIED LOAM BORROW PLACED AND SEEDED. THE MODIFIED LOAM BORROW SHALL HAVE A MINIMUM DEPTH OF 4" AND SHALL BE PLACED FLUSH WITH THE TOP OF ADJACENT CURB, EDGING, BERM, OR OTHER SURFACE.

8. THE CONTRACTOR SHALL WATER, MOW, AND FERTILIZE LAWN AREAS UNTIL SATISFACTORY GRASS STANDS, AND/OR THE OWNER OR ITS REPRESENTATIVE IS SATISFIED.

9. THE CONTRACTOR SHALL PROTECT ALL UNDERGROUND DRAINAGE, SEWER, AND UTILITY FACILITIES FROM EXCESSIVE VEHICULAR LOADS DURING CONSTRUCTION. ANY FACILITIES DAMAGED BY CONSTRUCTION LOADS SHALL BE REPAIRED BY THE CONTRACTOR AT THE CONTRACTOR'S EXPENSE.

10. UPON AWARD OF CONTRACT, CONTRACTOR SHALL MAKE ALL NECESSARY CONSTRUCTION NOTIFICATIONS AND APPLY FOR AND OBTAIN ALL NECESSARY PERMITS, PAY ALL FEES AND POST ALL BONDS ASSOCIATED WITH SAME, AND COORDINATE WITH THE ENGINEER AS REQUIRED.

11. CONTRACTOR SHALL BE SOLELY RESPONSIBLE FOR JOB SITE SAFETY AND ALL CONSTRUCTION MEANS AND METHODS.

12. PRIOR TO THE START OF CONSTRUCTION THE CONTRACTOR SHALL SUBMIT A SCHEDULE OF OPERATIONS TO THE OWNER AND THEIR REPRESENTATIVE. THE CONTRACTOR SHALL NOTIFY AND COORDINATE WITH THE OWNER, THEIR ENGINEER OR REPRESENTATIVE.

13. FINAL LAYOUT AND STAKING OF ALL PROPOSED FEATURES AND GRADING SHALL BE REVIEWED IN THE FIELD AND APPROVED BY THE OWNER'S REPRESENTATIVE PRIOR TO ANY SITE PREPARATION OR CONSTRUCTION. THE CONTRACTOR SHALL NOT ADJUST OR MODIFY THE LAYOUT AND STAKING OF ANY PROPOSED FEATURES UNTIL FINAL APPROVAL FROM THE OWNER'S REPRESENTATIVE.

14. THE CONTRACTOR SHALL REMOVE ALL STUMPS, RUBBISH, AND DEBRIS FROM THE PROJECT SITE. STORAGE OF THESE ITEMS WILL NOT BE PERMITTED ON THE PROJECT SITE. THE CONTRACTOR SHALL LEAVE THE SITE IN A SAFE, CLEAN, AND LEVEL CONDITION AT THE COMPLETION OF THE SITE CLEARING WORK.

15. ALL ELECTRICAL, TELEPHONE, AND LOCAL FIRE DEPARTMENT CONDUITS ARE TO BE INSTALLED BY THE ELECTRICAL CONTRACTOR. TRENCHING, BACKFILLING, CONCRETE AND STREET REPAIR SHALL BE PERFORMED BY THE GENERAL CONTRACTOR.

16. PROPOSED MANHOLE RIMS & GRATES ARE TO BE SET FLUSH AND CONSISTENT WITH GRADING PLANS. ADJUST ALL OTHER RIM ELEVATIONS OF MANHOLES, GAS GATES, WATER GATES AND OTHER UTILITIES TO FINISHED GRADE WITHIN THE LIMITS OF THE SITE WORK. IF ANY CONFLICTS ARE DISCOVERED NOTIFY OWNER'S REPRESENTATIVE.

17. THE CONTRACTOR SHALL MAKE ALL ARRANGEMENTS WITH THE APPROPRIATE UTILITY COMPANIES FOR POLE RELOCATION, AND FOR THE ALTERATION AND ADJUSTMENT OF GAS, ELECTRIC, TELEPHONE, FIRE ALARM, AND ANY OTHER PRIVATE UTILITIES, AS REQUIRED.

18. THE CONTRACTOR SHALL BE RESPONSIBLE FOR OBTAINING A TOWN OF HOLBROOK PUBLIC WORKS CONSTRUCTION LICENSE.

19. OWNER MAY REMOVE SNOW FROM SITE AS NECESSARY AND WILL NOT PLACE ON TOWN/STATE PROPERTY.

20. THE MAINTENANCE OF THE DRAINAGE SYSTEM IS THE OWNER'S RESPONSIBILITY.

21. ANY HYDRANT, FIRE PROTECTION WATER SUPPLY LINE AND ASSOCIATED DEVICES ON SUBJECT PROPERTY SHALL BE MAINTAINED TO THE REQUIREMENTS OF NFPA25.

22. SITE LIGHTING WILL BE BUILDING MOUNTED WALL PACK LED LIGHTS AND POLE MOUNTED LED LIGHTS WITH A MAX. POLE HEIGHT OF 20'. REFER TO SHEET #6 FOR LOCATIONS.

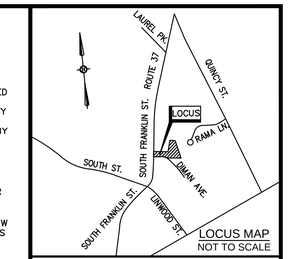

LOCUS MAP
NOT TO SCALE

PERMITTING SET

REVISIONS

No.	DATE	DESCRIPTION
1	8/18/2022	PER CON COM COMMENTS

DRAWN BY:	JVW
CHECKED BY:	EPJ / GWD
DESIGNED BY:	GWD / JVW

COVER, GENERAL NOTES AND LEGEND

809 S. FRANKLIN STREET
IN
HOLBROOK
(NORFOLK COUNTY)
MASSACHUSETTS

JUNE 29, 2022

PREPARED FOR:
JOHNSON SHEET METAL CO., INC
809 S. FRANKLIN STREET
HOLBROOK
MASSACHUSETTS 02343

JDE
Jacobs Driscoll Engineering
50 Oliver Street
North Easton, Massachusetts 02356
Phone: 508-928-4400
www.JacobsDriscoll.com

COMMONWEALTH OF MASSACHUSETTS
EDWARD P. JACOBS
NO. 46897
REGISTERED PROFESSIONAL LAND SURVEYOR

COMMONWEALTH OF MASSACHUSETTS
GREGORY W. DRISCOLL JR.
CIVIL
NO. 48073
REGISTERED PROFESSIONAL ENGINEER

8/18/2022

SHEET 1 OF 8

JOB NUMBER: 01-2021-020

X:\2021\01-2021-020 Johnson Sheet Metal Co. - 809 South Franklin Street, Holbrook\CIVIL\DESIGN\01-2021-020 COV.dwg

GENERAL NOTES

1.) LOCUS PROPERTY IS COMPRISED OF :
ASSESSOR'S MAP 52 PLOT 67
DEED BOOK 4806 / PAGE 88
OWNER OF RECORD: JOHNSON SHEET METAL CO.

2.) PLAN REFERENCES :
P–1.) PLAN BOOK 4771 PAGE 511
P–2.) PLAN BOOK 63 PAGE 698
P–3.) 1921 STATE HIGHWAY LAYOUT #1903 & 1946 STATE HIGHWAY LAYOUT #3481

3.) PROJECT BENCHMARKS :
BM–A NAIL SET IN UPOLE #3 ELEVATION = 157.99'
BM–B NORTHEAST CORNER OF RETAINING WALL ELEVATION = 155.75'
(DATUM: NAVD 88)

4.) ZONING INFORMATION ZONING DISTRICT : BI (BUSINESS I)
MINIMUM / MAXIMUM ZONING REQUIREMENTS
MIN. LOT AREA = 10,000 S.F.
MIN. LOT FRONTAGE = 100'
MIN. BUILDING SETBACKS : FRONT = 30' SIDE = 20' REAR = 30'
MAX. BUILDING HEIGHT = 35'
MAX. BUILDING COVERAGE % = 25%

5.) THE PROPERTY LINE INFORMATION SHOWN IS BASED ON CURRENT AVAILABLE RECORD INFORMATION CONSISTING OF PLANS AND DEEDS AND AN ACTUAL ON THE GROUND FIELD SURVEY PERFORMED BY THIS FIRM ON AND BETWEEN 11–05–21 AND 11–08–21.

6.) COMMUNITY PANEL NUMBER: 25021C0219E (DATE: 7–17–12) THE FLOOD INSURANCE RATE MAP DEFINES THIS AREA AS ZONE X, AREA OUTSIDE THE 0.2% CHANCE ANNUAL FLOOD PLAIN, 0.2% ANNUAL CHANCE FLOOD HAZARD, AND ZONE AE, AREAS IN THE 1% CHANCE ANNUAL FLOOD ZONE WITH BASE FLOOD ELEVATION OF 153.0.

7.) THE EDGE OF WETLAND BVW WAS DELINEATED ON JULY 22, 2021 BY ENVIRONMENTAL CONSULTING & RESTORATION, LLC. AND LOCATED BY THIS FIRM ON AND BETWEEN 11–05–21 TO 11–08–21.

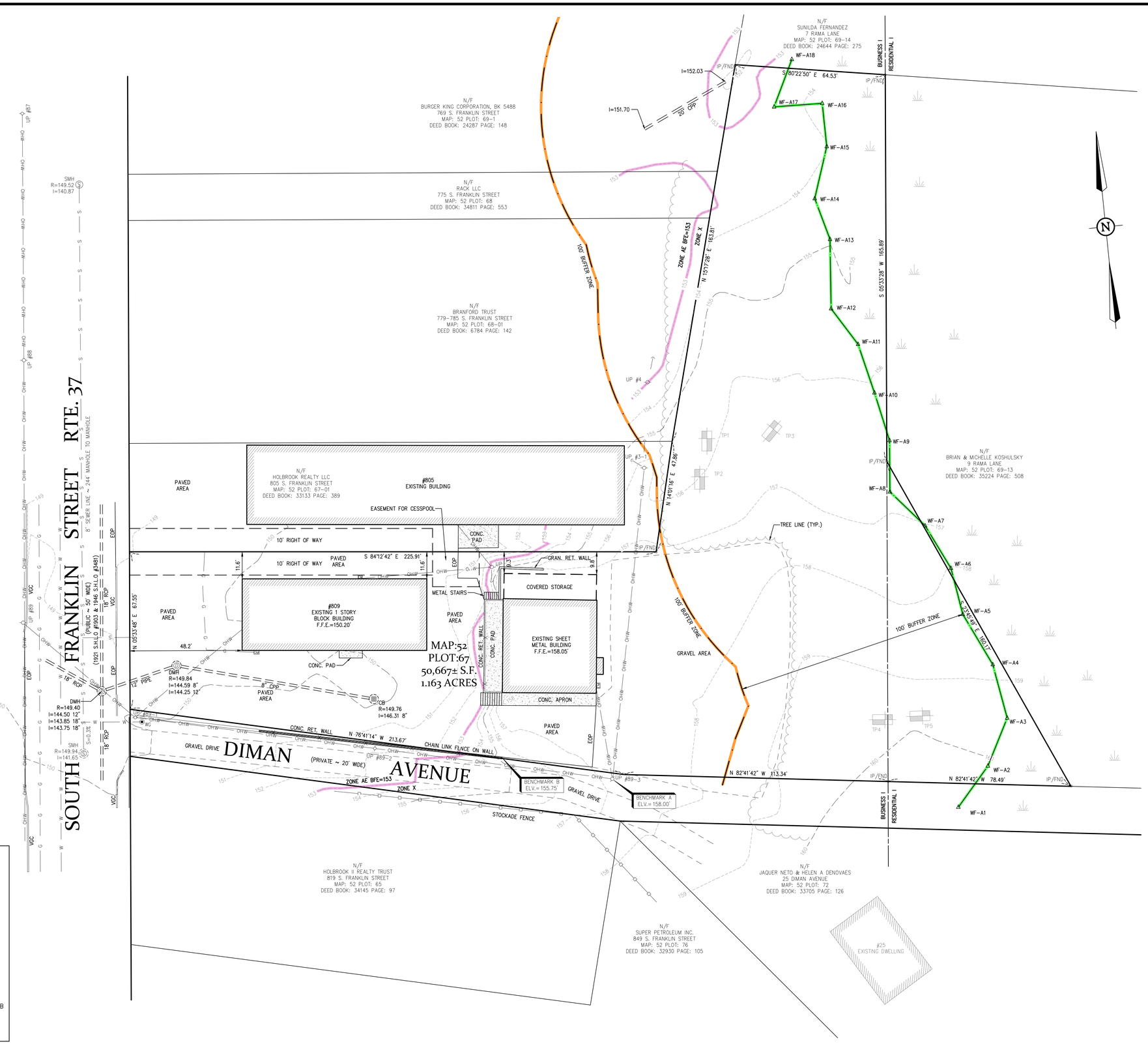

HOLBROOK CONSERVATION COLOR CHART

- EDGE OF WETLAND
- EDGE OF WATER
- 100' BUFFER ZONE
- EROSION CONTROL
- FLOOD ZONE

LEGEND

- = WATER GATE/SHUT–OFF
- = CATCH BASIN
- = DRAIN MANHOLE
- = SEWER MANHOLE
- = ELECTRIC MANHOLE
- = TELEPHONE MANHOLE
- = MANHOLE
- = ELECTRIC BOX
- = ELECTRIC METER
- = AIR CONDITIONER
- = GAS METER
- = GAS GATE
- = HYDRANT
- = LIGHT POLE
- = SIGN
- = DPW SIGNAL BOX
- = MONITORING WELL
- = STONE WALL
- = DRAIN PIPE
- = WATER LINE
- = SEWER LINE
- = GAS LINE
- = STOCKADE FENCE
- = CHAIN LINK FENCE
- = GUARD RAIL
- = OVERHEAD WIRES
- = TREE LINE
- = TREES & SHRUBS
- = UTILITY POLE/GUY WIRE
- = TRAFFIC SIGNAL POLE
- EOP = EDGE OF PAVEMENT
- PCC = PRECAST CONCRETE CURB
- VGC = VERTICAL GRANITE CURB
- SGC = SLOPED GRANITE CURB
- CCB = CAPE COD BERM

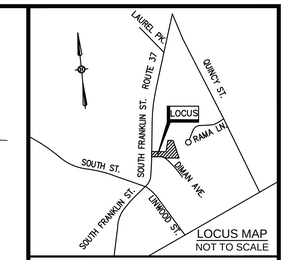

PERMITTING SET

REVISIONS

No.	DATE	DESCRIPTION
1	8/18/2022	PER CON COM COMMENTS

DRAWN BY:	JVW
CHECKED BY:	EPJ / GWD
DESIGNED BY:	GWD / JVW

EXISTING CONDITIONS PLAN

809 S. FRANKLIN STREET
IN
HOLBROOK
(NORFOLK COUNTY)
MASSACHUSETTS

JUNE 29, 2022

PREPARED FOR:
JOHNSON SHEET METAL CO., INC
809 S. FRANKLIN STREET
HOLBROOK
MASSACHUSETTS 02343

0 20' 40'
SCALE: 1" = 20'

JDE
Jacobs Driscoll Engineering
50 Oliver Street
North Easton, Massachusetts 02356
Phone: 508-928-4400
www.JacobsDriscoll.com

COMMONWEALTH OF MASSACHUSETTS
EDWARD P. JACOBS
NO. 46897
REGISTERED PROFESSIONAL LAND SURVEYOR
8/18/2022

SHEET 2 OF 8

JOB NUMBER: 01-2021-020

X:\2021\01-2021-020 Johnson Sheet Metal Co. - 809 South Franklin Street, Holbrook\CIVIL\DESIGN\01-2021-020 EX.dwg

ZONING TABLE

ZONE: BUSINESS I
MINIMUM / MAXIMUM ZONING REQUIREMENTS ** = VARIANCE TO BE REQUESTED
PROPOSED USE: OFFICE/SHOP BUILDING

	REQUIRED (AC)	PROVIDED
MIN. LOT AREA	10,000 S.F.	50,667 S.F.
MIN. FRONTAGE	100'	67.55'*
MIN. FRONT BLDG. SETBACK	30'	48.2' EXIST.
MIN. SIDE BLDG. SETBACK	20'	9.3' EXIST./13.7' PROP.*
MIN. REAR BLDG. SETBACK	30'	24.2' PROP.**
MAX. BLDG. HEIGHT(STORIES)	35'	MATCH EXIST.
MAX. % BLDG. LOT COVERAGE	25%	17.9%
PARKING SCHEDULE OFFICE 1/300 S.F. SHOP 1/900 S.F.	1,910/300 = 6 SPACES 7,390/900 = 8 SPACES 14 SPACES REQUIRED	11 SPACES*** ***WAIVER TO BE REQUESTED
ACCESSIBLE PARKING	1 TO 25 = 1 SPACE	1 SPACE
* EXISTING NON-CONFORMING LOT		

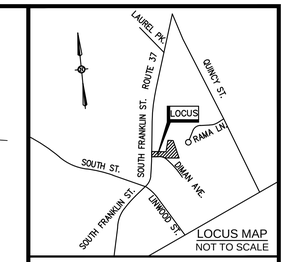

PERMITTING SET

REVISIONS

No.	DATE	DESCRIPTION
1	8/18/2022	PER CON COM COMMENTS

DRAWN BY: JVW
CHECKED BY: EPJ / GWD
DESIGNED BY: GWD / JVW

LAYOUT & MATERIALS PLAN

809 S. FRANKLIN STREET
IN
HOLBROOK
(NORFOLK COUNTY)
MASSACHUSETTS

JUNE 29, 2022

PREPARED FOR:
JOHNSON SHEET METAL CO., INC
809 S. FRANKLIN STREET
HOLBROOK
MASSACHUSETTS 02343

0 20' 40'
SCALE: 1" = 20'

JDE
Jacobs Driscoll Engineering
50 Oliver Street
North Easton, Massachusetts 02356
Phone: 508-928-4400
www.JacobsDriscoll.com

COMMONWEALTH OF MASSACHUSETTS
EDWARD P. JACOBS
NO. 46897
REGISTERED PROFESSIONAL LAND SURVEYOR
8/18/2022

COMMONWEALTH OF MASSACHUSETTS
GREGORY W. DRISCOLL JR.
CIVIL
NO. 48073
REGISTERED PROFESSIONAL ENGINEER

SHEET 3 OF 8

JOB NUMBER: 01-2021-020

HOLBROOK
CONSERVATION COLOR CHART

- EDGE OF WETLAND
- EDGE OF WATER
- 100' BUFFER ZONE
- EROSION CONTROL
- FLOOD ZONE

X:\2021\01-2021-020 Johnson Sheet Metal Co. - 809 South Franklin Street, Holbrook\CIVIL\DESIGN\01-2021-020 LM.dwg

GRADING AND DRAINAGE NOTES

1. THE PROJECT ELEVATIONS ARE BASED ON THE NAVD 88 VERTICAL DATUM.

2. DEMOLITION DEBRIS, EXCESS AND UNSUITABLE MATERIALS FROM THE DEMOLITION OPERATION SHALL BE REMOVED FROM THE SITE AND DISPOSED OF IN A LEGAL MANNER BY THE CONTRACTOR.

3. DISTURBED AREAS SHALL BE PROTECTED AT ALL TIMES TO CONTROL SEDIMENT TRANSPORT BEYOND THE LIMIT OF WORK.

4. DISTURBED AREAS SHALL BE TREATED WITH WATER DURING EXCAVATION, OR APPROVED ALTERNATIVE, FOR DUST CONTROL.

5. ALL DISTURBED AREAS NOT OTHERWISE TREATED SHALL BE STABILIZED WITH 4" LOAM, SEED, & MULCH. THE CONTRACTOR SHALL BE RESPONSIBLE FOR AREAS UNTIL VEGETATION HAS BEEN PERMANENTLY ESTABLISHED. SLOPES IN EXCESS OF 3:1 SHALL BE FURTHER STABILIZED WITH EROSION CONTROL BLANKETS (ECB) OF CURLEX OR EQUAL.

6. ALL DRAINAGE STRUCTURES AND PIPING SHALL BE DESIGNED AND INSTALLED FOR H-20 LOADING.

7. CPP - HIGH DENSITY POLYETHYLENE CORRUGATED PIPE WITH SMOOTH INTERIOR WALL TO MEET ADS N-12 PIPE SPECIFICATION OR EQUAL. CPP PIPE USE SHALL BE ALLOWED AS NOTED, WITH A DIAMETER UP TO AND INCLUDING 24". BACKFILLING CPP MUST FOLLOW MANUFACTURER'S RECOMMENDATIONS AND SPECIAL CARE MUST BE EXERCISED (SEE ADS PRODUCT NOTE 3.115).

8. ROOF DOWNSPOUTS SHALL BE TIED INTO ROOF DRAINS AS SHOWN ON PLAN. ROOF DRAINS TO BE AT LEAST 6" CPP AT 1.00% SLOPE MINIMUM, UNLESS OTHERWISE NOTED. MINIMUM TYPICAL COVER SHALL BE 2 FEET, UNLESS OTHERWISE NOTED.

9. ALL RCP PIPE TO MEET CLASS IV SPECIFICATIONS.

10. ALL PIPE INSTALLATIONS SHALL FOLLOW PROJECT SPECIFICATIONS AND PIPE MANUFACTURER RECOMMENDATIONS.

11. INSPECTION AND MAINTENANCE, AS OUTLINED HEREIN, SHALL BE PERFORMED FOUR TIMES WITHIN THE FIRST YEAR OF OPERATION. THENCE, INSPECTIONS AND MAINTENANCE SHALL BE CONDUCTED ON A SEMIANNUAL BASIS (2 TIMES A YR.) AND AFTER ALL LARGE STORMS. AN INSPECTION REPORT SHALL BE MAINTAINED.

12. ACCUMULATED DEBRIS IN CATCH BASINS, TRENCH GRATES, BASINS AND LEACHING BASINS SHALL BE REMOVED BEFORE IT EXCEEDS 2 FEET IN DEPTH AND DISPOSED OF PROPERLY. BROKEN OR DAMAGED GAS TRAPS/ HOODS SHALL BE IMMEDIATELY REPAIRED OR REPLACED TO ENSURE ADEQUATE FUNCTION.

UTILITY NOTES

1. 12" MINIMUM VERTICAL CLEARANCE SHALL BE MAINTAINED BETWEEN ALL UTILITY CROSSINGS.

2. A MINIMUM 10' HORIZONTAL SEPARATION SHALL BE MAINTAINED BETWEEN WATER AND SEWER LINES. WHERE WATER LINES CROSS SEWER LINES, THE SEWER LINE SHALL BE LOCATED WITH A MINIMUM VERTICAL CLEARANCE OF 18" BELOW THE WATER LINE. THE SEWER LINE JOINTS SHALL BE LOCATED EQUIDISTANT AND AS FAR AWAY FROM THE WATER LINE AS POSSIBLE. WHEN IT IS IMPOSSIBLE TO ACHIEVE HORIZONTAL AND/OR VERTICAL SEPARATION AS STIPULATED ABOVE, BOTH THE WATER LINE AND SEWER LINE AT THE CROSSING LOCATION SHALL BE CONSTRUCTED OF MECHANICAL JOINT CEMENT-LINED DUCTILE IRON PIPE FOR ONE FULL 20' PIPE LENGTH OR ANOTHER EQUIVALENT THAT IS WATERTIGHT AND STRUCTURALLY SOUND. THE JOINTS FOR BOTH PIPES SHALL BE LOCATED AS FAR AWAY FROM THE CROSSING AS POSSIBLE. BOTH PIPES SHOULD BE PRESSURE TESTED TO 150 PSI TO ENSURE THAT THEY ARE WATERTIGHT.

3. SEWER BUILDING CONNECTIONS SHALL BE 6" MIN. SDR 35 PVC, UNLESS OTHERWISE NOTED, AT A SLOPE OF 1% MINIMUM FROM MAINLINE TO BUILDING UNIT WITH A CLEAN OUT SET AT A DISTANCE OF 10' (UNLESS OTHERWISE NOTED) OFF FOUNDATION.

4. TYPICAL COVER OVER WATER LINE SHALL BE 5'. IF LESS THAN 4' OF COVER IS PROVIDED, INSULATE WATER LINE AGAINST FREEZING.

5. GAS, ELECTRIC, DATA/COM IS SHOWN SCHEMATICALLY HEREON. THESE UTILITIES SHALL BE INSTALLED WITH A MINIMUM COVER OF 3 FEET UNLESS OTHERWISE NOTED OR OTHERWISE DIRECTED BY THE CONTROLLING UTILITY COMPANY. CONTRACTOR SHALL COORDINATE FINAL LAYOUT WITH APPLICABLE UTILITY COMPANY.

6. ALL COMMERCIAL LIGHTING SHALL DIRECT ALL LIGHT SO AS TO KEEP ALL LIGHTING WITHIN SUBJECT LOT.

7. ALL UTILITY CUTS THROUGH EXISTING CONCRETE OR BITUMINOUS CONCRETE PAVED SURFACES SHALL BE SAW CUT. BACK FILLING OF TRENCH SHALL INCLUDE 12" IN DEPTH FLOWABLE FILL TO BE THE BASE COURSE OF THE SURFACE TREATMENT. THE SURFACE TREATMENT SHALL THEN BE REPLACED IN KIND. IF THE BITUMINOUS CONCRETE SURFACE IS WITHIN THE ROADWAY THE BITUMINOUS CONCRETE TOP COURSE SHALL BE FINISHED WITH INFRARED TREATMENT TO BLEND EXISTING & NEWLY PAVED SURFACES.

CONSTRUCTION SEQUENCE

1. INSTALL EROSION CONTROL DEVICES TO ESTABLISH THE LIMIT OF WORK AS SHOWN ON PLAN.

2. CONSTRUCT TEMPORARY CONSTRUCTION EXIT AREA AS SHOWN ON DETAIL #509.

3. DISCHARGES FROM DEWATERING OF EXCAVATIONS SHALL NOT BE DIVERTED DIRECTLY INTO ANY WETLANDS OR EXISTING STORM DRAINS WITHOUT PRETREATMENT VIA SETTLING BASINS.

4. CLEAR AND GRUB SITE WITHIN THE LIMIT OF WORK.

5. CONSTRUCT STORM WATER MANAGEMENT BASIN TO BE USED AS SEDIMENT TRAP. INSTALL LOW FLOW PERFORATED PIPE WITH FILTER FABRIC AND STONE. DO NOT INSTALL LOW FLOW ORIFICE CAP UNTIL SITE IS FULLY STABILIZED.

6. ESTABLISH ROUGH SUB GRADES FOR PARKING LOT AND BUILDING PLATFORM.

7. PERFORM BUILDING AND SITE CONSTRUCTION PER APPROVED SITE PLANS.

8. INSPECT AND MAINTAIN EROSION CONTROL MEASURES AFTER RAINFALL EVENTS AND A MINIMUM OF ONCE PER WEEK.

9. REMOVE SEDIMENT BUILDUP AT EROSION CONTROL DEVICES AS NEEDED. REDISTRIBUTE MATERIAL OVER SITE IN CONFORMANCE WITH EARTHWORK SPECIFICATIONS.

10. AS DRAINAGE STRUCTURES ARE INSTALLED, INSTALL FILTER FABRIC AND STRAW BALES AROUND NEW STRUCTURES IN ACCORDANCE WITH DETAIL #607 AND MAINTAIN THEM UNTIL PAVEMENT IS IN PLACE AND VEGETATION IS ESTABLISHED. ALL OUTFALLS SHALL BE IMMEDIATELY STABILIZED WITH STONE PROTECTION AS REQUIRED.

11. ALL CUT AND FILL SLOPES SHALL BE TEMPORARILY STABILIZED WITH TOP SOIL, SEED AND MULCH OR CURLEX AS REQUIRED IF CONSTRUCTION ACTIVITY CEASES ON SAID SLOPES FOR A PERIOD OF SEVEN DAYS OR GREATER. ALL SLOPES SHALL BE PERMANENTLY STABILIZED AS REQUIRED IMMEDIATELY UPON COMPLETION OF FINAL GRADING.

12. COMPLETE FINISH GRADING AND STABILIZATION OF SITE. PLACE FINAL PAVING COURSE.

13. REMOVE SEDIMENT FROM ALL DRAINAGE STRUCTURES AND PIPES AFTER COMPLETION OF CONSTRUCTION. REMOVE AND REGRADE TEMPORARY BERMS, SWALES, CHECK DAMS, ETC. STABILIZE DISTURBED AREAS.

14. CLEAN OUT ALL SEDIMENT FROM STORM WATER MANAGEMENT BASIN AND OUTLET STRUCTURES. REGRADE TO CONTOURS PER DESIGN. STABILIZE ALL SLOPES AS REQUIRED.

15. REMOVE EROSION CONTROL DEVICES & SILT FENCE UPON ESTABLISHMENT OF PERMANENT GROUND COVER AND ISSUANCE OF A CERTIFICATE OF COMPLIANCE FROM THE HOLBROOK CONSERVATION COMMISSION. STABILIZE ALL AREAS WHERE STRAW WATTLES (EROSION CONTROL DEVICE) WERE REMOVED.

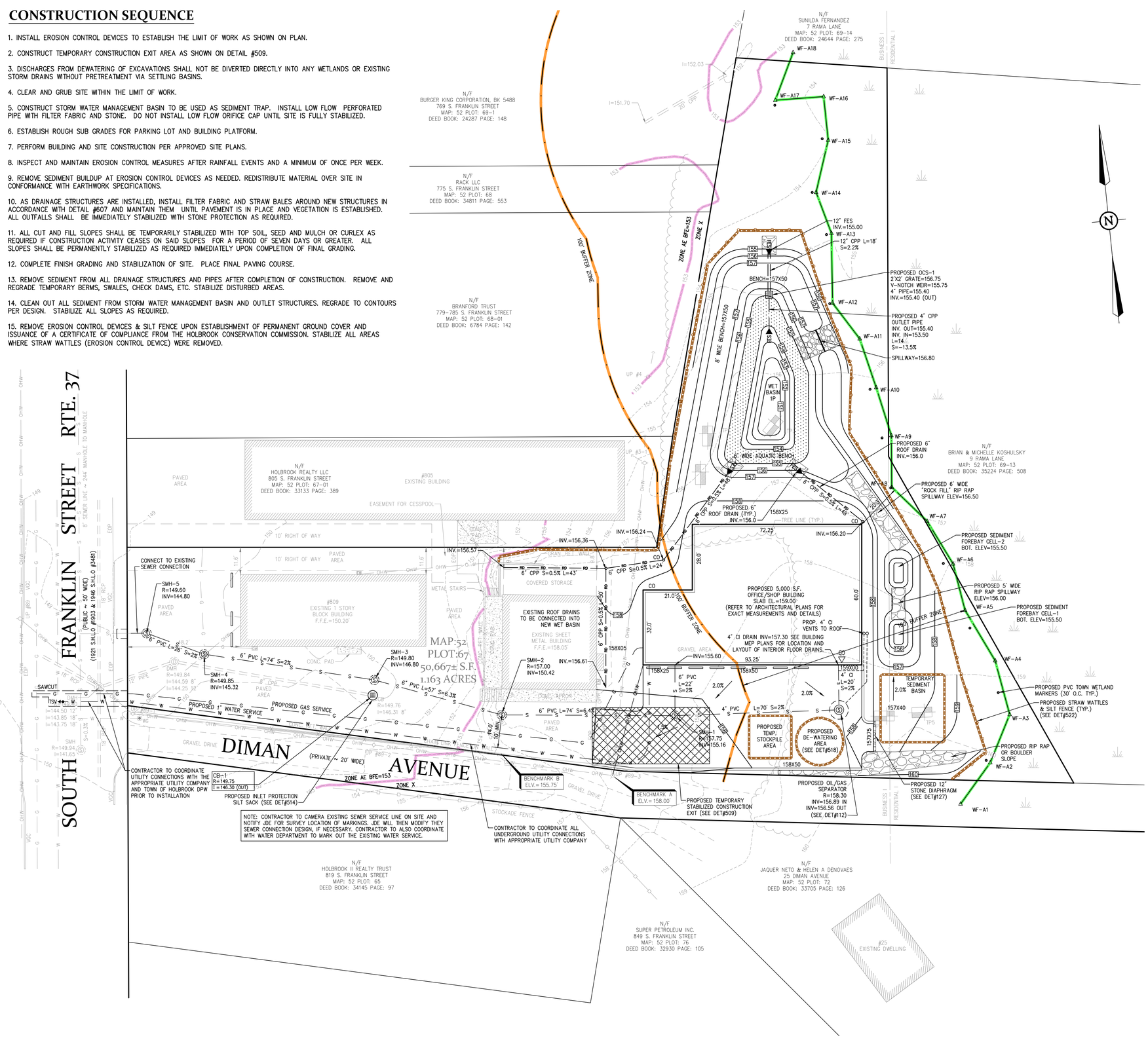

HOLBROOK CONSERVATION COLOR CHART

- EDGE OF WETLAND
- EDGE OF WATER
- 100' BUFFER ZONE
- EROSION CONTROL
- FLOOD ZONE

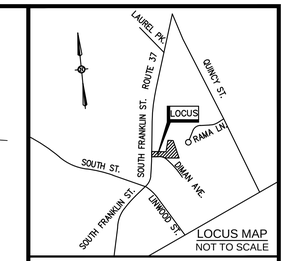

LOCUS MAP
NOT TO SCALE

PERMITTING SET

REVISIONS

No.	DATE	DESCRIPTION
1	8/18/2022	PER CON COM COMMENTS

DRAWN BY:	JVW
CHECKED BY:	EPJ / GWD
DESIGNED BY:	GWD / JVW

GRADING, DRAINAGE, UTILITY & EROSION CONTROL PLAN

809 S. FRANKLIN STREET
IN
HOLBROOK
(NORFOLK COUNTY)
MASSACHUSETTS

JUNE 29, 2022

PREPARED FOR:
JOHNSON SHEET METAL CO., INC
809 S. FRANKLIN STREET
HOLBROOK
MASSACHUSETTS 02343

0 20' 40'
SCALE: 1" = 20'

JDE
Jacobs Driscoll Engineering
50 Oliver Street
North Easton, Massachusetts 02356
Phone: 508-928-4400
www.JacobsDriscoll.com

COMMONWEALTH OF MASSACHUSETTS EDWARD P. JACOBS NO. 46897 REGISTERED PROFESSIONAL LAND SURVEYOR
COMMONWEALTH OF MASSACHUSETTS GREGORY W. DRISCOLL JR. CIVIL NO. 48073 REGISTERED PROFESSIONAL ENGINEER
8/18/2022

SHEET 4 OF 8

JOB NUMBER: 01-2021-020

X:\2021\01-2021-020 Johnson Sheet Metal Co. - 809 South Franklin Street, Holbrook\CIVIL\DESIGN\01-2021-020 GDJ.dwg

LANDSCAPE NOTES

1. FURNISH AND INSTALL ALL PLANTS SHOWN ON THE DRAWINGS SPECIFIED HEREIN, AND IN THE QUANTITIES LISTED ON THE PLANT LIST, NO SUBSTITUTIONS WILL BE PERMITTED, UNLESS APPROVED BY THE ENGINEER.

2. LOAM TO BE GOOD QUALITY, FERTILE, FREE OF WEEDS, STICKS, STONES OVER 3/4", AND ROOTS. SPREAD TO A MINIMUM OF 6" OVER ALL PLANTED AREAS.

3. NURSERY STOCK SHALL MEET THE STANDARDS OF THE AMERICAN ASSOCIATION OF NURSERYMEN AS TO GRADING AND QUALITY.

4. ONLY NURSERY-GROWN PLANTS, GROWN IN ACCORDANCE WITH ACCEPTED HORTICULTURAL PRACTICES AND GROWN UNDER CLIMATIC CONDITIONS SIMILAR TO THOSE IN THE LOCALITY OF THE PROJECT FOR AT LEAST (2) YEARS, WILL BE ACCEPTED.

5. SET PLANTS PLUMB AND AT A LEVEL THAT AFTER SETTLEMENT THEY BEAR THE SAME RELATION TO THE SURROUNDING GROUND AS THEY BORE TO THE GROUND FROM WHICH THEY WERE DUG. SETTLE BACKFILL MATERIAL FOR PLANTS, THOROUGHLY AND PROPERLY BY FIRMING OR TAMPING FORM SAUCERS CAPABLE OF HOLDING WATER ABOUT INDIVIDUAL PLANTS, BY PLACING RIDGES OF PLANTING SOIL AROUND EACH.

6. STAKE ALL TREES OVER 5' AS SHOWN ON PLANS. REMOVE STAKES AT THE END OF THE GUARANTEE PERIOD.

7. WATERING: WATER ALL PLANTS WITHIN 48 HOURS AFTER PLANTING IF CONDITIONS WARRANT, AND AS MANY TIMES THEREAFTER TO SUSTAIN HEALTHY CONDITIONS, SATURATE THE SOIL AROUND EACH PLANT THOROUGHLY AT EACH WATERING.

8. PRUNING: PRUNE PLANTS, AS DIRECTED BY THE OWNER, AT THE PROJECT SITE BEFORE OR IMMEDIATELY AFTER PLANTING IN ACCORDANCE WITH THE BEST HORTICULTURAL PRACTICE. CUT BROKEN, DEAD OR INJURED BRANCHES FLUSH WITH THE TRUNK OR THE LIMB. PRUNE ALL BROKEN ROOTS ON THE PLANT SIDE OF THE BREAK. PAINT CUTS OVER 3/4" IN DIAMETER WITH TREE WOUND PAINT. PRUNING SHALL NOT DEFORM OR OTHERWISE DESTROY THE TYPICAL SHAPE OR SYMMETRY OF THE PLANT AND SHALL NOT REDUCE THE HEIGHT BY MORE THAN ONE-THIRD. DO NOT CUT BACK THE LEADER OF THE PLANT UNLESS DIRECTED BY THE LANDSCAPE ARCHITECT.

9. FERTILIZING: FERTILIZE SHRUB BEDS WITH 10-6-4 FERTILIZER AT A RATE OF THREE POUNDS PER 100 SQUARE FEET OF SURFACE AREA, BROAD CAST. APPLY THE FERTILIZER UNIFORMLY TO THE SURFACE BEDS AND WORK INTO THE UPPER TWO INCHES OF SOIL. FERTILIZE INDIVIDUAL TREES AT THE RATE OF ONE AGRIFORM PELLET PER INCH OF TRUNK DIAMETER (FOLLOW MANUFACTURER'S WRITTEN INSTRUCTIONS). APPLY A SECOND APPLICATION OF FERTILIZER TO ALL PLANT ITEMS AT THE SAME SPECIFIED RATES OVER THE MULCH AT THE END OF AN EIGHT WEEK PERIOD.

10. MULCHING: COVER ALL PLANTED AREAS WITH 3" HEMLOCK BLEND MULCH, NO SUBSTITUTIONS, WITHIN A SEVENTY TWO (72) HOUR PERIOD AFTER PLANTING. ALL MULCHED BEDS TO HAVE WEED BARRIER FABRIC INSTALLED. ALL COMMERCIAL FOUNDATION PLANTING BEDS WILL BE ⅜" PEA STONE OR ROCK MULCH PER STATE FIRE CODE.

11. GUARANTEE: ALL PLANTS FURNISHED BY THE CONTRACTOR SHALL BE GUARANTEED FOR A PERIOD OF ONE (1) YEAR AFTER PRELIMINARY INSPECTION AND SHALL BE ALIVE AND IN SATISFACTORY GROWTH AT THE END OF THE GUARANTEE PERIOD. ALL DEAD OR DYING PLANT MATERIAL SHALL BE REPLACED AT ONCE BY THE CONTRACTOR, FREE OF CHARGE.

12. PLANTING NUMBERS AND SPECIES ARE SUBJECT TO CHANGE BASED ON AVAILABILITY AT THE TIME OF INSTALLATION. CONTRACTOR TO COORDINATE WITH LANDSCAPING SUPPLIER AND SUBMIT REVISED LIST TO LOCAL BUILDING DEPARTMENT.

13. CONTRACTOR TO COORDINATE ALL TREE LOCATIONS WITH SUBSURFACE UTILITIES, ANY CONFLICTS FOUND WILL BE RESOLVED IN THE FIELD BY THE CONTRACTOR AND REPORTED TO THE ENGINEER OF RECORD. UTILITY LOCATIONS WILL TAKE PRECEDENCE OVER PROPOSED PLANTING LOCATIONS.

14. ALL PLANTINGS AT DRIVE WAY ENTRANCES WILL BE MAINTAINED TO A HEIGHT OF 3' OR LESS AS TO NOT OBSCURE TRAFFIC VISIBILITY AND SITE DISTANCE.

15. MINIMUM BRANCH HEIGHT FOR ALL SHADE TREES WILL BE 6' TALL.

16. MINIMUM HEIGHT FOR EVERGREEN TREES WILL BE 6' TALL.

17. MINIMUM SIZE FOR SHRUBS WILL BE 3' TALL.

18. GROUND COVER PLANTINGS WILL BE PLACED IN A MODIFIED PLANTING BED 18" DEEP MINIMUM.

PLANT LEGEND

	KEY	DESCRIPTION	QTY.	SIZE
TREES	BN	RIVER BIRCH BETULA NIGRA	2	8-10' TALL 1 "CAL MIN.
	AR	RED MAPLE ACER RUBRUM	2	8-10' TALL 3 "CAL MIN.
	TO	ARBORVIAE "PYRAMIDAL" THUJA OCCIDENTALIS	7	6' TALL
SHRUBS AND GROUND COVER	CAS	VARIEGATED REDTWIG DOGWOOD CORNUS ALBA 'ELEGANTISSIMA'	2	36 INCHES
	HM	NIKKO BLUE HYDRANGEA HYDRANGEA MACROPHYLLA	5	36 INCHES
	BS	COMMON BOXWOOD BUXUS SEMPERVIRENS	4	24 INCHES

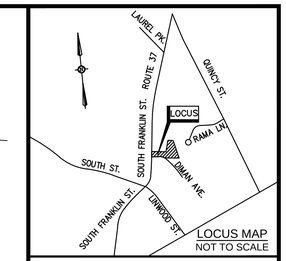

PERMITTING SET

REVISIONS

No.	DATE	DESCRIPTION
1	8/18/2022	PER CON COM COMMENTS

DRAWN BY:	JVW
CHECKED BY:	EPJ / GWD
DESIGNED BY:	GWD / JVW

LANDSCAPING PLAN

809 S. FRANKLIN STREET
IN
HOLBROOK
(NORFOLK COUNTY)
MASSACHUSETTS

JUNE 29, 2022

PREPARED FOR:
JOHNSON SHEET METAL CO., INC
809 S. FRANKLIN STREET
HOLBROOK
MASSACHUSETTS 02343

0 20' 40'
SCALE: 1" = 20'

JDE
Jacobs Driscoll Engineering
50 Oliver Street
North Easton, Massachusetts 02356
Phone: 508-928-4400
www.JacobsDriscoll.com

COMMONWEALTH OF MASSACHUSETTS
GREGORY W. DRISCOLL JR.
CIVIL
NO. 48073
REGISTERED PROFESSIONAL ENGINEER
8/18/2022

SHEET 5 OF 8

JOB NUMBER: 01-2021-020

X:\2021\01-2021-020 Johnson Sheet Metal Co. - 809 South Franklin Street, Holbrook\CIVIL\DESIGN\01-2021-020 LSP.dwg

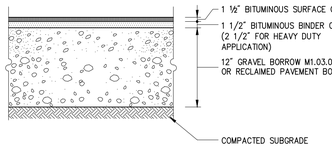

STANDARD DUTY FLEXIBLE PAVEMENT

COMPOSITION AND COMPACTION ACCEPTANCE TESTS

1. OBTAIN SAMPLES FROM PLANT TO INDICATE CONFORMANCE WITH M3.11.09

2. PAVEMENT DENSITY AS OUTLINED IN M3.11.09

3. ALL SAMPLES TO BE TAKEN IN ACCORDANCE WITH AASHTO T230

4. MATERIALS SHALL MEET OR EXCEED THE REQUIREMENTS SPECIFIED IN SECTION M3.11.00 DIVISION III , MATERIALS AND THE FOLLOWING SUBSECTIONS

MINERAL AGGREGATE :M3.11.04 BITUMINOUS MATERIALS :M3.11.06 MINERAL FILLER :M3.11.05
COMPOSITION OF BASE COURSE :M3.11.02

5. THE BITUMINOUS CONCRETE BASE COURSE SHALL BE CONSTRUCTED IN ACCORDANCE WITH RELEVANT SECTIONS/PROVISIONS OF SECTION 460 FOR CLASS I BITUMINOUS CONCRETE PAVEMENT, TYPE I-1

6. CLASS I BITUMINOUS PAVEMENT ,TYPE I-1 REQUIRED THE SAME TESTING AS BASE COURSE AND SHALL HAVE A MINIMUM OF 95% COMPACTION. TESTING TO BE COMPLETED BY METHODS OUTLINED IN M3.11.00

DETAIL # 418 — BITUMINOUS CONCRETE PAVEMENT — JDE

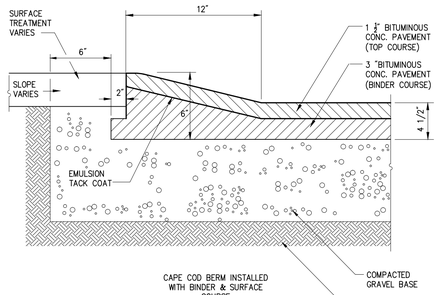

DETAIL # 411B — MONOLITHIC CAPE COD BERM (MCCB) — JDE

DESIGN DATA

1. CONCRETE STRENGTH F'C 4,000 PSI @ 28 DAYS. DENSITY 150 PCF.
2. CEMENT, PORTLAND TYPE I OR III PER C150-81.
3. ADMIXTURES, AIR & PLASTICIZERS PER ASTM C223-82.
4. AIR ENTRAINMENT 5%-7%.
5. APPROXIMATE WEIGHT: 380 LBS.
6. CENTER WHEELSTOP ON PARKING STALL

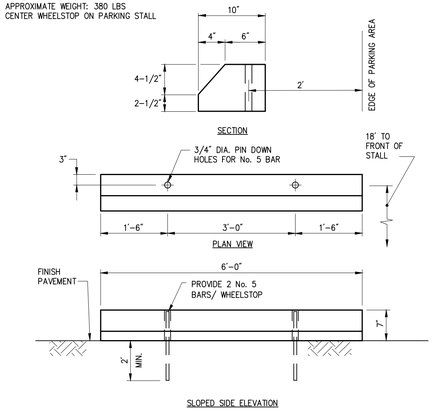

DETAIL # 445 — CONCRETE WHEEL STOP — JDE

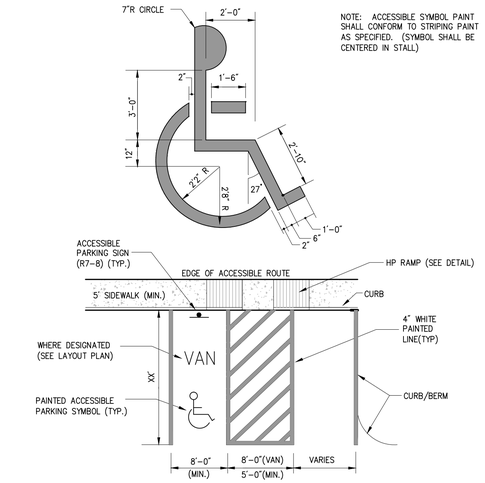

NOTE: ACCESSIBLE SYMBOL PAINT SHALL CONFORM TO STRIPING PAINT AS SPECIFIED. (SYMBOL SHALL BE CENTERED IN STALL)

DETAIL # 702 — PAINTED HANDICAPPED PARKING SYMBOL — JDE

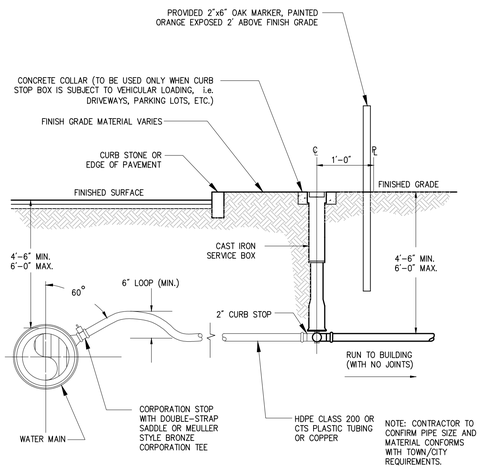

NOTE: CONTRACTOR TO CONFIRM PIPE SIZE AND MATERIAL CONFORMS WITH TOWN/CITY REQUIREMENTS.

DETAIL # 304 — WATER SERVICE CONNECTION — JDE

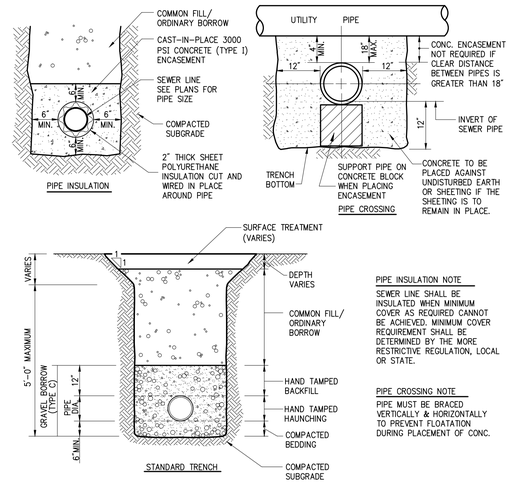

PIPE INSULATION NOTE

SEWER LINE SHALL BE INSULATED WHEN MINIMUM COVER AS REQUIRED CANNOT BE ACHIEVED. MINIMUM COVER REQUIREMENT SHALL BE DETERMINED BY THE MORE RESTRICTIVE REGULATION, LOCAL OR STATE.

PIPE CROSSING NOTE

PIPE MUST BE BRACED VERTICALLY & HORIZONTALLY TO PREVENT FLOATATION DURING PLACEMENT OF CONC.

DETAIL #018 — UTILITY TRENCH — JDE

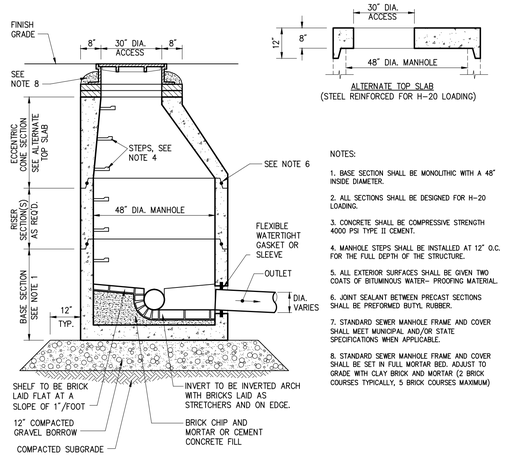

NOTES:

1. BASE SECTION SHALL BE MONOLITHIC WITH A 48" INSIDE DIAMETER.

2. ALL SECTIONS SHALL BE DESIGNED FOR H-20 LOADING.

3. CONCRETE SHALL BE COMPRESSIVE STRENGTH 4000 PSI TYPE II CEMENT.

4. MANHOLE STEPS SHALL BE INSTALLED AT 12" O.C. FOR THE FULL DEPTH OF THE STRUCTURE.

5. ALL EXTERIOR SURFACES SHALL BE GIVEN TWO COATS OF BITUMINOUS WATER- PROOFING MATERIAL.

6. JOINT SEALANT BETWEEN PRECAST SECTIONS SHALL BE PREFORMED BUTYL RUBBER.

7. STANDARD SEWER MANHOLE FRAME AND COVER SHALL MEET MUNICIPAL AND/OR STATE SPECIFICATIONS WHEN APPLICABLE.

8. STANDARD SEWER MANHOLE FRAME AND COVER SHALL BE SET IN FULL MORTAR BED. ADJUST TO GRADE WITH CLAY BRICK AND MORTAR (2 BRICK COURSES TYPICALLY, 5 BRICK COURSES MAXIMUM)

DETAIL # 201 — SANITARY SEWER MANHOLE (SMH) — JDE

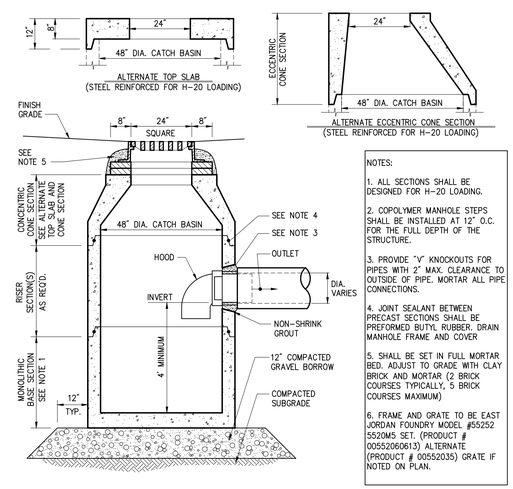

NOTES:

1. ALL SECTIONS SHALL BE DESIGNED FOR H-20 LOADING.

2. COPOLYMER MANHOLE STEPS SHALL BE INSTALLED AT 12" O.C. FOR THE FULL DEPTH OF THE STRUCTURE.

3. PROVIDE "V" KNOCKOUTS FOR PIPES WITH 2" MAX. CLEARANCE TO OUTSIDE OF PIPE. MORTAR ALL PIPE CONNECTIONS.

4. JOINT SEALANT BETWEEN PRECAST SECTIONS SHALL BE PREFORMED BUTYL RUBBER. DRAIN MANHOLE FRAME AND COVER

5. SHALL BE SET IN FULL MORTAR BED. ADJUST TO GRADE WITH CLAY BRICK AND MORTAR (2 BRICK COURSES TYPICALLY, 5 BRICK COURSES MAXIMUM)

6. FRAME AND GRATE TO BE EAST JORDAN FOUNDRY MODEL #55252 5520M5 SET. (PRODUCT # 00552060613) ALTERNATE (PRODUCT # 00552035) GRATE IF NOTED ON PLAN.

DETAIL # 105 — CATCH BASIN W/ GAS TRAP HOOD (CB) — JDE

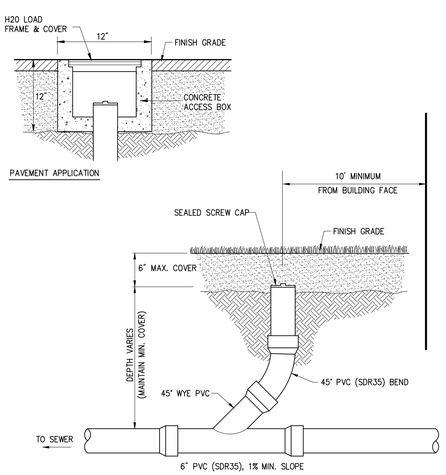

DETAIL # 204 — SEWER SERVICE CLEAN-OUT (CO) — JDE

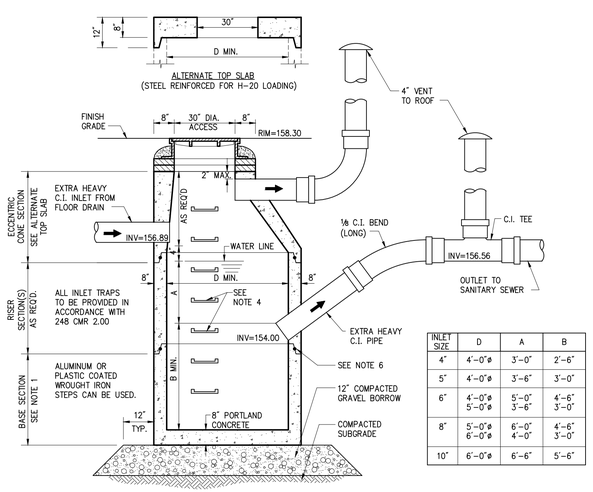

INLET SIZE	D	A	B
4"	4'-0"ø	3'-0"	2'-6"
5"	4'-0"ø	3'-6"	3'-0"
6"	4'-0"ø 5'-0"ø	5'-0" 3'-6"	4'-6" 3'-0"
8"	5'-0"ø 6'-0"ø	6'-0" 4'-0"	4'-6" 3'-0"
10"	6'-0"ø	6'-6"	5'-6"

NOTES:

1. BASE SECTION SHALL BE MONOLITHIC WITH 48", 60" OR 72" INSIDE DIAMETER.

2. ALL SECTIONS SHALL BE DESIGNED FOR H-20 LOADING.

3. CONCRETE SHALL BE COMPRESSIVE STRENGTH 4000 PSI, TYPE II CEMENT.

4. MANHOLE STEPS SHALL BE INSTALLED AT 12" O.C. FOR THE FULL DEPTH OF THE STRUCTURE.

5. ALL EXTERIOR SURFACES SHALL BE GIVEN TWO COATS OF BITUMINOUS WATERPROOFING MATERIAL.

6. JOINT SEALANT BETWEEN PRECAST SECTIONS SHALL BE PREFORMED BUTYL RUBBER.

7. STANDARD SEWER MANHOLE FRAME AND COVER SHALL BE SET IN FULL MORTAR BED. ADJUST TO GRADE WITH CLAY BRICK AND MORTAR (2 BRICK COURSES TYPICALLY, 5 BRICK COURSES MAXIMUM).

8. STRUCTURE TO BE LOCATED OUTSIDE OF BUILDING WHERE POSSIBLE, COVER TO HAVE A CENTER HOLE.

9. A TIGHT COVER MUST BE USED IF STRUCTURE IS LOCATED INSIDE OF BUILDING.

10. THE STRUCTURE SHALL BE SO LOCATED AND CONSTRUCTED THAT SURFACE WATER SHALL BE EXCLUDED.

11. INLET PIPE SHALL BE AT LEAST FOUR INCHES ABOVE NORMAL WATER LINE.

12. WHERE SUBJECT TO FROST OR CRUSHING CONDITIONS, OUTLET SHALL BE AT LEAST THREE FEET BELOW THE SURFACE.

13. THE NEW MANHOLE MUST BE FILLED WITH CLEAN WATER BEFORE USING, AND AFTER BEING EMPTIED FOR PERIODIC CLEANING.

14. ALL OIL AND GASOLINE MUST BE REMOVED BEFORE CLEANING OUT THE BASIN, AND MUST NOT BE DISCHARGED INTO THE SEWER THROUGH OTHER FIXTURES.

15. SPECIFICATIONS FOR COVERING SPECIAL CASES OR CONDITIONS, SHALL BE APPROVED BY THE LOCAL AUTHORITIES, AND THE AUTHORITIES OF THE M.W.R.A.

16. BOTH VENTS SHALL BE EXTENDED INDEPENDENTLY 18" ABOVE THE ROOF, OR AS APPROVED BY THE LOCAL AUTHORITIES, AND THE AUTHORITIES OF THE M.W.R.A.

DETAIL # 112 — M.W.R.A. OIL AND GAS SEPARATOR — JDE

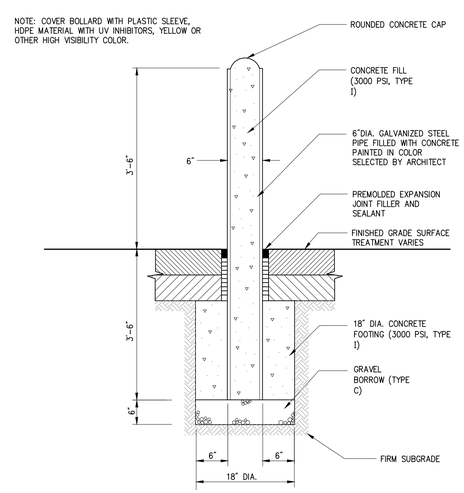

DETAIL # 446 — CONCRETE FILLED BOLLARD — JDE

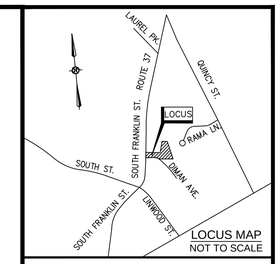

LOCUS MAP
NOT TO SCALE

PERMITTING SET

REVISIONS

No.	DATE	DESCRIPTION
1	8/18/2022	PER CON COM COMMENTS

DRAWN BY:	JVW
CHECKED BY:	EPJ / GWD
DESIGNED BY:	GWD / JVW

CONSTRUCTION DETAILS

809 S. FRANKLIN STREET
IN
HOLBROOK
(NORFOLK COUNTY)
MASSACHUSETTS

JUNE 29, 2022

PREPARED FOR:
JOHNSON SHEET METAL CO., INC
809 S. FRANKLIN STREET
HOLBROOK
MASSACHUSETTS 02343

JDE
Jacobs Driscoll Engineering
50 Oliver Street
North Easton, Massachusetts 02356
Phone: 508-928-4400
www.JacobsDriscoll.com

COMMONWEALTH OF MASSACHUSETTS
GREGORY W. DRISCOLL JR.
CIVIL
NO. 49073
REGISTERED PROFESSIONAL ENGINEER
8/18/2022

SHEET 6 OF 8

JOB NUMBER: 01-2021-020

X:\2021\01-2021-020 Johnson Sheet Metal Co. - 809 South Franklin Street, Holbrook\CIVIL\DESIGN\01-2021-020 DET.dwg

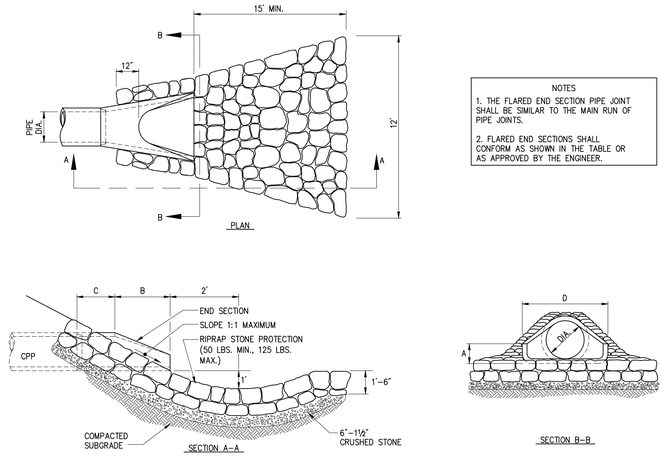

DIMENSIONAL TABLE						
PIPE DIA.	A	B	C	D	E	R
12"	4"	2'-0"	4'-7⅛"	2'-0"	2"	9"
15"	6"	2'-3"	3'-10"	2'-6"	2¼"	11"
18"	9"	2'-3"	3'-10"	3'-0"	2½"	12"
24"	9½"	3'-7½"	2'-6"	4'-0"	3"	14"
30"	12"	4'-6"	1'-7¾"	5'-0"	3½"	15"
36"	15"	5'-3"	2'-10¾"	6'-0"	4"	20"
42"	21"	5'-3"	2'-11"	6'-6"	4½"	22"
48"	24"	6'-0	2'-2"	7'-0"	5"	22"
54"	27"	5'-5"	2'-11"	7'-6"	5½"	24'
60"	30"	5'-0"	3'-3"	8'-0"	6"	24"

NOTES
1. THE FLARED END SECTION PIPE JOINT SHALL BE SIMILAR TO THE MAIN RUN OF PIPE JOINTS.
2. FLARED END SECTIONS SHALL CONFORM AS SHOWN IN THE TABLE OR AS APPROVED BY THE ENGINEER.

DETAIL # 114 — FLARED END SECTION W/ STONE PROTECTION — JDE

NOTE:
60% OF STONE TO BE 12" DIMENSION MIN. (MODIFIED ROCKFILL MHD SPEC. SEC. M2.02.4 WIDTH OF RIP-RAP WATER WAY (3x SWALE WIDTH MIN.)

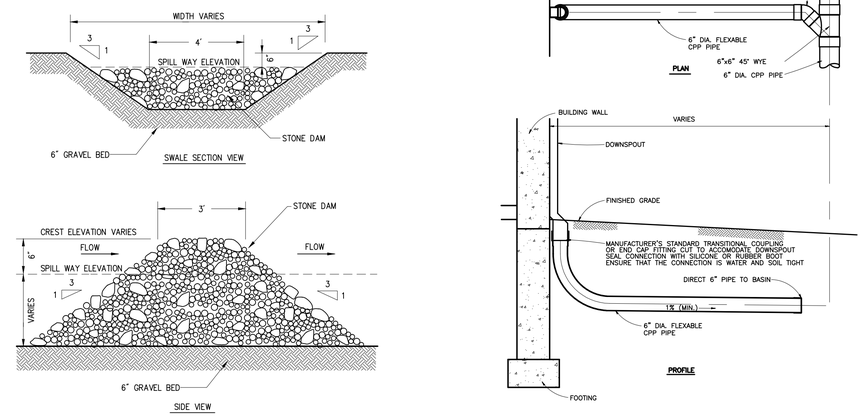

DETAIL # 165 — STONE CHECK DAM — JDE

DETAIL # 132 — ROOF DRAIN — JDE

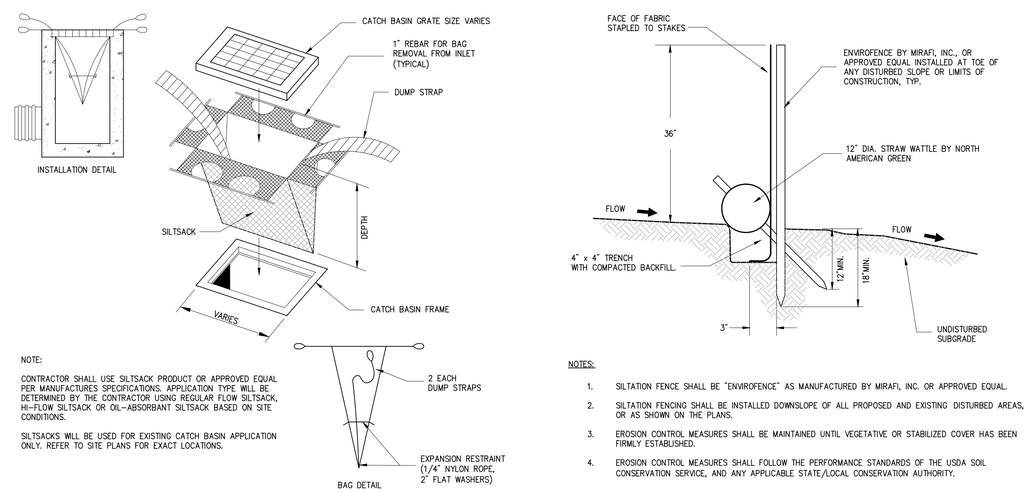

NOTES:
1. SILTATION FENCE SHALL BE "ENVIROFENCE" AS MANUFACTURED BY MIRAFI, INC. OR APPROVED EQUAL.
2. SILTATION FENCING SHALL BE INSTALLED DOWNSLOPE OF ALL PROPOSED AND EXISTING DISTURBED AREAS, OR AS SHOWN ON THE PLANS.
3. EROSION CONTROL MEASURES SHALL BE MAINTAINED UNTIL VEGETATIVE OR STABILIZED COVER HAS BEEN FIRMLY ESTABLISHED.
4. EROSION CONTROL MEASURES SHALL FOLLOW THE PERFORMANCE STANDARDS OF THE USDA SOIL CONSERVATION SERVICE, AND ANY APPLICABLE STATE/LOCAL CONSERVATION AUTHORITY.

DETAIL # 514 — INLET PROTECTION SILTSACK — JDE

DETAIL # 522 — STRAW WATTLE / SILT FENCE BARRIER — JDE

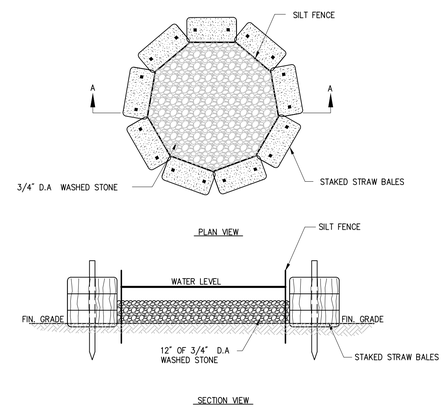

DETAIL # 518 — DE-WATERING SEDIMENT BASIN — JDE

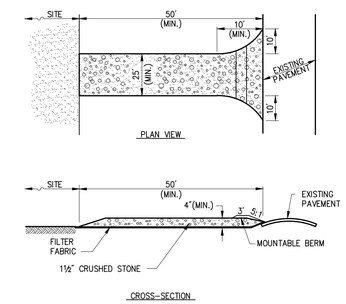

NOTES:
1. ENTRANCE WIDTH SHALL BE A TWENTY-FIVE (25) FOOT MINIMUM, BUT NOT LESS THAN THE FULL WIDTH AT POINTS WHERE INGRESS OR EGRESS OCCURS.
2. THE ENTRANCE SHALL BE MAINTAINED IN A CONDITION WHICH SHALL PREVENT TRACKING OR FLOWING OF SEDIMENT ONTO PUBLIC RIGHTS-OF-WAY. THIS MAY REQUIRE PERIODIC TOP DRESSING WITH ADDITIONAL STONE AS CONDITIONS DEMAND AND REPAIR OR CLEANOUT OF ANY MEASURES USED TO TRAP SEDIMENT. ALL SEDIMENT SPILLED, DROPPED, WASHED OR TRACKED ONTO PUBLIC RIGHTS-OF-WAY MUST BE REMOVED IMMEDIATELY. BERM SHALL BE PERMITTED. PERIODIC INSPECTION AND MAINTENANCE SHALL BE PROVIDED AS NEEDED.

DETAIL # 509 — STABILIZED CONSTRUCTION EXIT — JDE

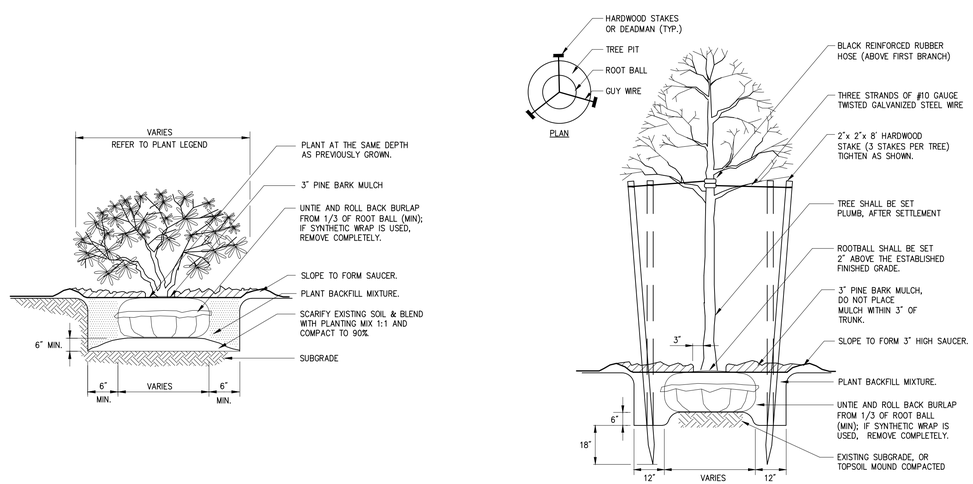

DETAIL # 600 — SHRUB PLANTING — JDE

DETAIL # 602 — TREE PLANTING (under 4" caliper) — JDE

DETAIL # 604 — EVERGREEN TREE PLANTING — JDE

DETAIL # 019 — CONSERVATION MARKER — JDE

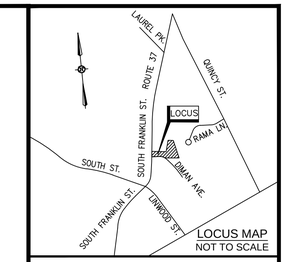

PERMITTING SET

REVISIONS

No.	DATE	DESCRIPTION
1	8/18/2022	PER CON COM COMMENTS

DRAWN BY:	JVW
CHECKED BY:	EPJ / GWD
DESIGNED BY:	GWD / JVW

CONSTRUCTION DETAILS

809 S. FRANKLIN STREET
IN
HOLBROOK
(NORFOLK COUNTY)
MASSACHUSETTS

JUNE 29, 2022

PREPARED FOR:
JOHNSON SHEET METAL CO., INC
809 S. FRANKLIN STREET
HOLBROOK
MASSACHUSETTS 02343

JDE
Jacobs Driscoll Engineering
50 Oliver Street
North Easton, Massachusetts 02356
Phone: 508-928-4400
www.JacobsDriscoll.com

COMMONWEALTH OF MASSACHUSETTS
GREGORY W. DRISCOLL JR.
CIVIL
NO. 48073
REGISTERED PROFESSIONAL ENGINEER
8/18/2022

SHEET 7 OF 8

JOB NUMBER: 01-2021-020

X:\2021\01-2021-020 Johnson Sheet Metal Co. - 809 South Franklin Street, Holbrook\CIVIL\DESIGN\01-2021-020 DET.dwg

NOTES:
1. FILL AND BASE FOR DIKES SHALL INSURE WATER TIGHTNESS AND STABILITY.
2. BASIN SIDE SLOPES AND BOTTOM SHALL BE AMENDED WITH COMPOST PER THE STORMWATER MANAGEMENT REGULATIONS HAND BOOK AND SEEDED AT A RATE OF 2 POUNDS OF RED TOP, 15 POUNDS OF CREEPING RED FESCUE AND 20 POUNDS TALL FESCUE PER ACRE.
3. THE CONTRACTOR SHALL NOT DISCHARGE SEDIMENT-LADEN WATER TO INFILTRATION BASIN COMPONENTS DURING CONSTRUCTION, INCLUDING DEWATERING OR TEMPORARY SURFACE RUNOFF.
4. ALL CONTRIBUTING AREAS TO THE BASIN SHALL BE FULLY STABILIZED PRIOR TO THE BASIN BEING PLACED INTO SERVICE.
5. THE CONTRACTOR SHALL PROVIDE PROTECTION ABOVE AND AROUND THE INFILTRATION AREA OF THE BASIN FROM CONSTRUCTION VEHICLE ACTIVITY. NO HEAVY EQUIPMENT SHALL BE ALLOWED ON THE BASIN FLOORS AFTER INSTALLATION. CONTRACTOR SHALL MINIMIZE CONSTRUCTION EQUIPMENT TRAFFIC WITHIN THE BASIN AT ALL TIMES DURING AND AFTER CONSTRUCTION.

NOTE : INSTALL MONITORING WELL IN THE BASIN FLOOR PER EVERY 5,000 SF OF BASIN FLOOR. MAKE SURE THE MONITORING WELLS EXTEND 20' BENETH THE BASIN FLOOR OR TO THE LIMITING LAYER, WHICH EVER IS HIGHER.(2 REQUIRED FOR THIS BASIN)

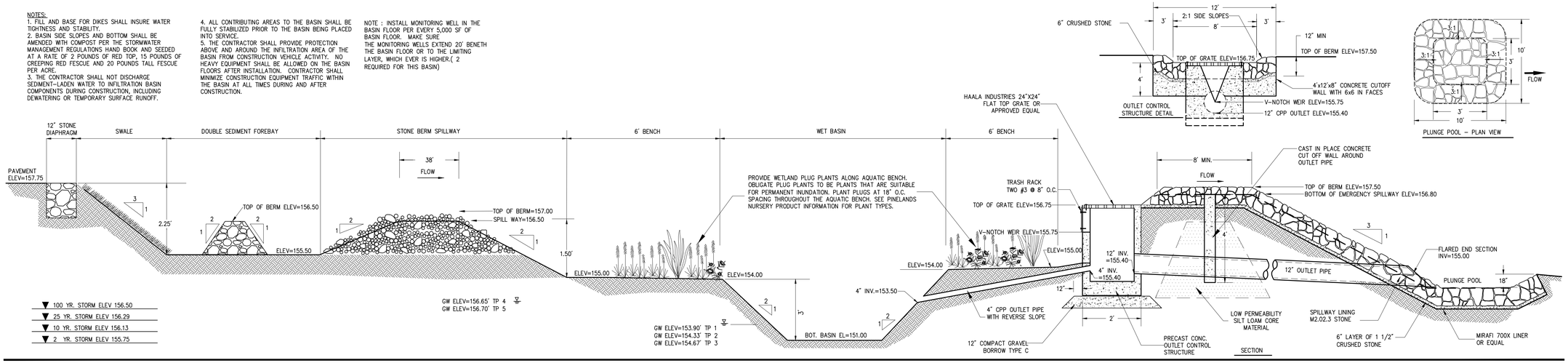

DETAIL # 169 — SEDIMENT FOREBAY AND WET BASIN SECTION - BASIN 1 P — JDE

OBSERVATION HOLE DATA

INDICATES PERC TEST — INDICATES OBSERVED GROUNDWATER

TEST PIT # 1 — GRD. EL. 155.90 — GW. EL. 153.90
DATE: 4-19-22 — MOTTLES @ 24"
TEST BY: GREGORY DRISCOLL, JR. SE2816
WITNESSED BY:
CERTIFIED BY: GREGORY DRISCOLL, JR.

DEPTH (IN)	SOIL HORZ.	SOIL COLOR	SOIL TEXTURE	OTHER
0-2"	0		–	
2-12"	A	10YR2/2	SANDY LOAM	
12-28"	B	10YR4/6	SANDY LOAM	
28-65"	C1	10YR3/4	LOAMY SAND	
65-96"	C2	7.5Y3/2	COURSE SAND	
65-96"	C3	2.5Y5/3	SANDY LOAM	

WATER OBSERVED @ 54"
PERC RATE ____ MIN/INCH
* MASSACHUSETTS SOIL EVALUATOR, LICENSED

OBSERVATION HOLE DATA

INDICATES PERC TEST — INDICATES OBSERVED GROUNDWATER

TEST PIT # 2 — GRD. EL. 156.00 — GW. EL. 154.33
DATE: 4-19-22 — MOTTLES @ 20"
TEST BY: GREGORY DRISCOLL, JR. SE2816
WITNESSED BY:
CERTIFIED BY: GREGORY DRISCOLL, JR.

DEPTH (IN)	SOIL HORZ.	SOIL COLOR	SOIL TEXTURE	OTHER
0-2"	0		–	
2-11"	A	10YR2/2	SANDY LOAM	
11-25"	B	10YR4/6	SANDY LOAM	
25-38"	C1	10YR4/3	LOAMY SAND	
38-54"	C2	7.5Y3/1	COURSE SAND	
54-82"	C3	2.5Y5/3	SANDY LOAM	

WATER OBSERVED @ 43"
PERC RATE ____ MIN/INCH
* MASSACHUSETTS SOIL EVALUATOR, LICENSED

OBSERVATION HOLE DATA

INDICATES PERC TEST — INDICATES OBSERVED GROUNDWATER

TEST PIT # 3 — GRD. EL. 156.50 — GW. EL. 154.67
DATE: 4-19-22 — MOTTLES @ 22"
TEST BY: GREGORY DRISCOLL, JR. SE2816
WITNESSED BY:
CERTIFIED BY: GREGORY DRISCOLL, JR.

DEPTH (IN)	SOIL HORZ.	SOIL COLOR	SOIL TEXTURE	OTHER
0-2"	0		–	
2-10"	A	10YR2/2	SANDY LOAM	
10-21"	B	10YR4/6	SANDY LOAM	
21-36"	C1	10YR3/4	LOAMY SAND	
36-50"	C2	7.5Y3/2	COURSE SAND	
50-72"	C3	2.5Y5/3	SANDY LOAM	

WATER OBSERVED @ 36"
PERC RATE ____ MIN/INCH
* MASSACHUSETTS SOIL EVALUATOR, LICENSED

OBSERVATION HOLE DATA

INDICATES PERC TEST — INDICATES OBSERVED GROUNDWATER

TEST PIT # 4 — GRD. EL. 159.65 — GW. EL. 156.65
DATE: 4-19-22 — MOTTLES @ 36"
TEST BY: GREGORY DRISCOLL, JR. SE2816
WITNESSED BY:
CERTIFIED BY: GREGORY DRISCOLL, JR.

DEPTH (IN)	SOIL HORZ.	SOIL COLOR	SOIL TEXTURE	OTHER
0-6"	A	10YR2/2	SANDY LOAM	
2-12"	B	10YR4/6	SANDY LOAM	
12-28"	C1	10YR3/4	SANDY LOAM	

WATER OBSERVED @ 36"
PERC RATE ____ MIN/INCH
* MASSACHUSETTS SOIL EVALUATOR, LICENSED

OBSERVATION HOLE DATA

INDICATES PERC TEST — INDICATES OBSERVED GROUNDWATER

TEST PIT # 5 — GRD. EL. 159.70 — GW. EL. 156.70
DATE: 4-19-22 — MOTTLES @ 36"
TEST BY: GREGORY DRISCOLL, JR. SE2816
WITNESSED BY:
CERTIFIED BY: GREGORY DRISCOLL, JR.

DEPTH (IN)	SOIL HORZ.	SOIL COLOR	SOIL TEXTURE	OTHER
0-6"	A	10YR2/1	SANDY LOAM	
6-38"	B	10YR4/6	SANDY LOAM	
38-60"	C	10YR5/3	SANDY LOAM	

WATER OBSERVED @ 36"
PERC RATE ____ MIN/INCH
* MASSACHUSETTS SOIL EVALUATOR, LICENSED

NOTES:
1. REFER TO SITE PLAN FOR LOCATIONS, PIPE SIZES, INVERTS, ETC.
2. REFER TO ARCHITECTURAL PLANS FOR DOWNSPOUT SIZES AND LOCATIONS.

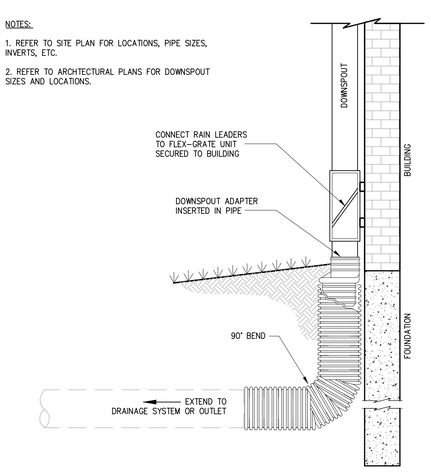

DETAIL # 128 — DOWN SPOUT (FLEXI GRATE) — JDE

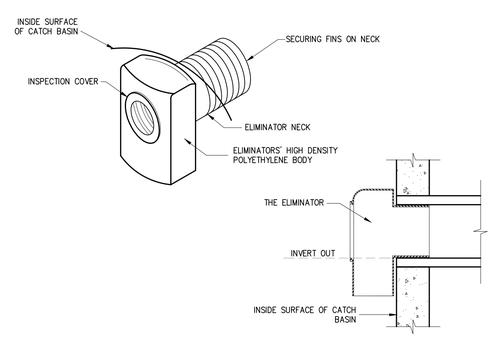

ELIMINATOR NOTES :
1. THE ELIMINATOR SHALL BE INSTALLED IN ACCORDANCE WITH THE MANUFACTURERS INSTRUCTIONS.
2. THE PIPE WHERE THE ELIMINATOR IS INSTALLED SHALL BE CLEANED OF ALL DEBRIS.
3. POSITION THE ELIMINATOR INTO THE OPENING OF THE PIPE, ENSURE THE UNIT IS IN THE UPRIGHT POSITION AND APPLY FOWARD PRESSURE UNTIL THE BACK OF THE UNIT IS FLUSH WITH THE INSIDE WALL OF THE BASIN STRUCTURE.
4. APPLY A LIGHT COATING OF PIPE SOAP TO THE INSPECTION PORT FACE, ALIGN CLEANOUT COVER EARS WITH THE GROOVES IN THE UNITS FACE AND TURN CLOCKWISE TO SECURE COVER.
5. HOOD SHALL BE "THE ELIMINATOR" OIL & FLOATING DEBRIS TRAP AS MANUFACTURED BY GROUND WATER RESCUE, INC., QUINCY, MA., TEL. 617-773-1128 ON THE WEB @ WWW.KLEANSTREAM.COM.

DETAIL # 129 — ELIMINATOR DEBRIS TRAP — JDE

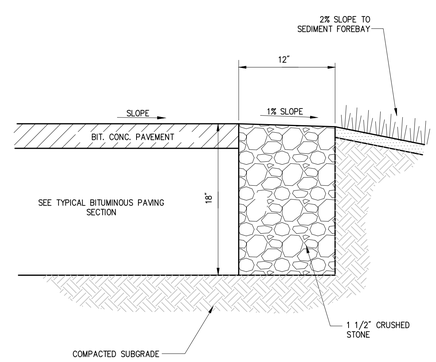

DETAIL # 127 — STONE DIAPHRAGM STRIP — JDE

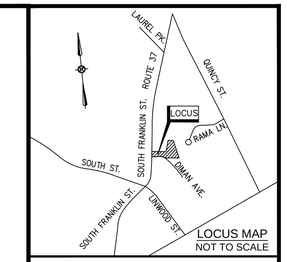

PERMITTING SET

REVISIONS

No.	DATE	DESCRIPTION
1	8/18/2022	PER CON COM COMMENTS

DRAWN BY: JVW
CHECKED BY: EPJ / GWD
DESIGNED BY: GWD / JVW

CONSTRUCTION DETAILS

809 S. FRANKLIN STREET
IN
HOLBROOK
(NORFOLK COUNTY)
MASSACHUSETTS

JUNE 29, 2022

PREPARED FOR:
JOHNSON SHEET METAL CO., INC
809 S. FRANKLIN STREET
HOLBROOK
MASSACHUSETTS 02343

JDE
Jacobs Driscoll Engineering
50 Oliver Street
North Easton, Massachusetts 02356
Phone: 508-928-4400
www.JacobsDriscoll.com

COMMONWEALTH OF MASSACHUSETTS — GREGORY W. DRISCOLL JR. — CIVIL — NO. 48073 — REGISTERED PROFESSIONAL ENGINEER
8/18/2022

SHEET 8 OF 8

JOB NUMBER: 01-2021-020

X:\2021\01-2021-020 Johnson Sheet Metal Co. - 809 South Franklin Street, Holbrook\CIVIL\DESIGN\01-2021-020 DET.dwg